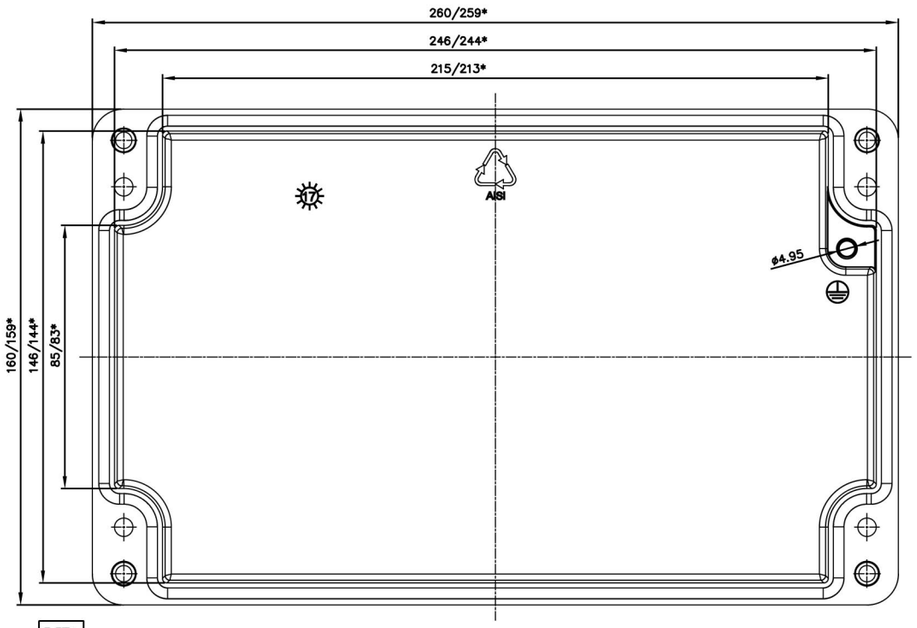

LID

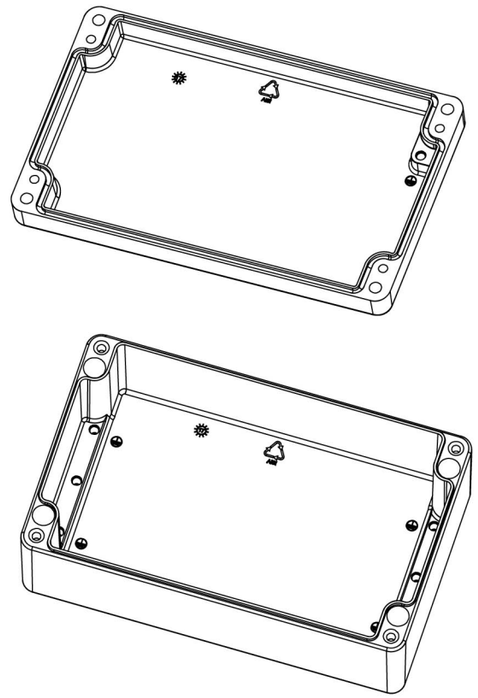

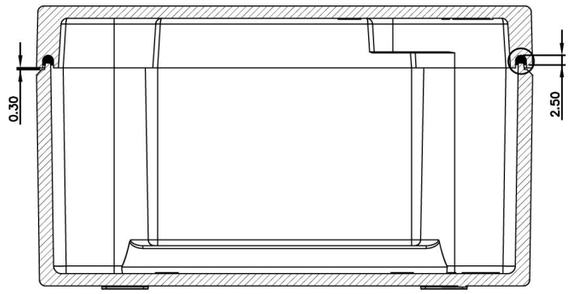

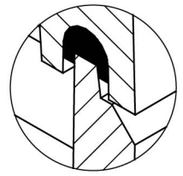

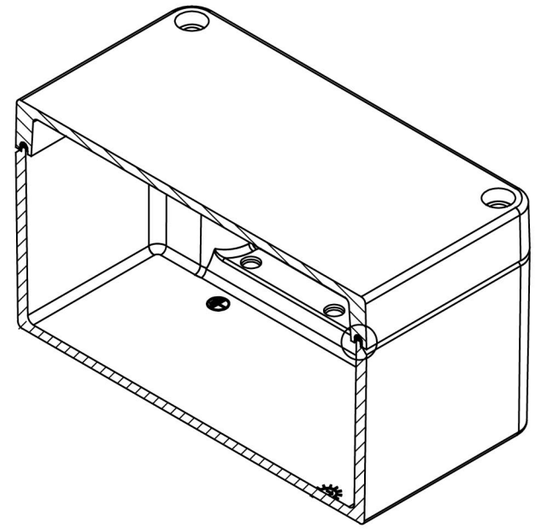

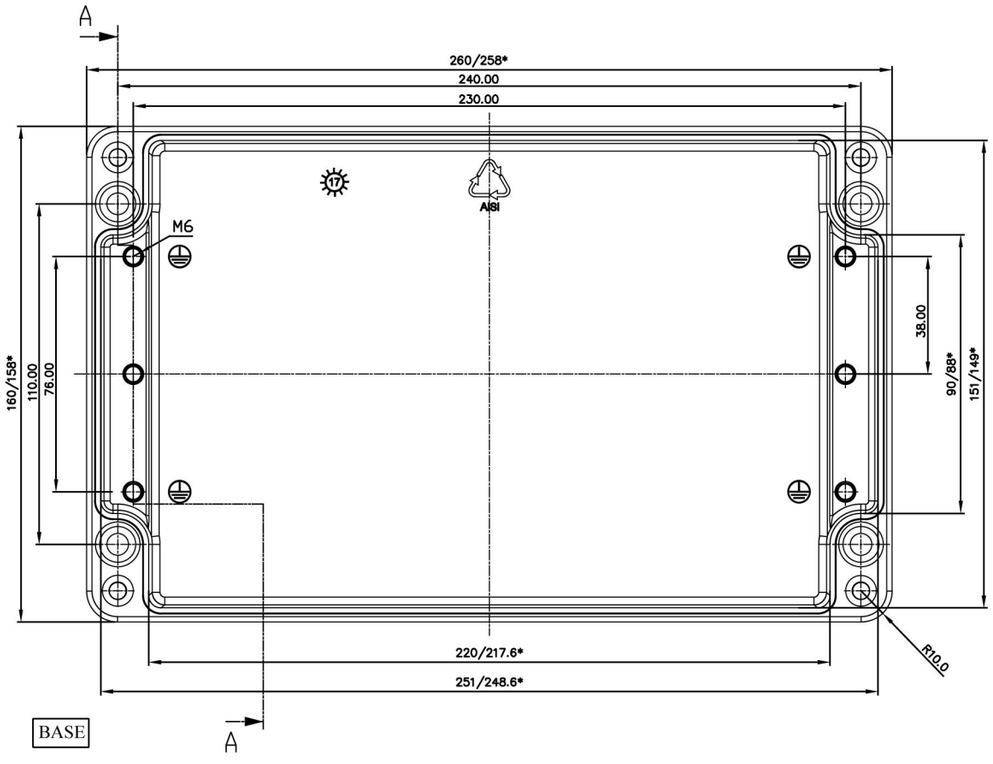

BASE

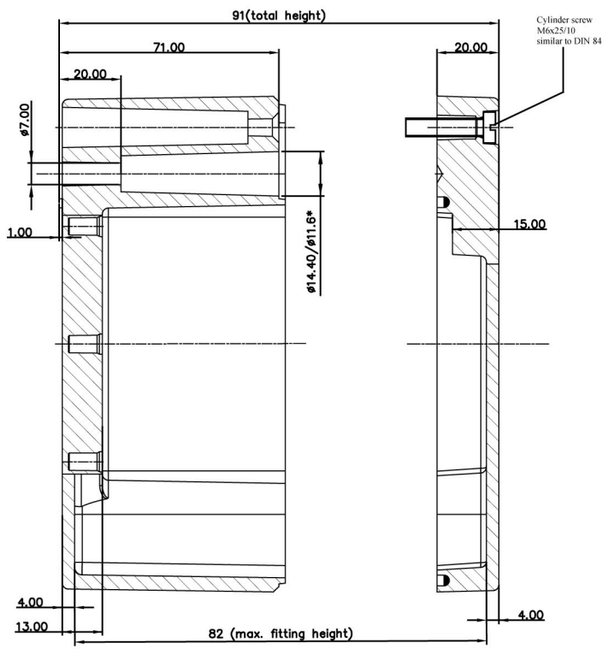

* = Conical form tapering downwards
Free dimensions-tolerance to GTA 13/5 DIN 1688

Item Number	RAL / Colour
128-000-669	RAL3001 / red
128-000-667	RAL7001 / grey
128-000-668	RAL7005 / black
128-000-666	uncoated

ENCLOSURE/BOX MEETS THE REQUIREMENTS OF
IS/IEC 60529:2001
OR
EN 60529
FOR IP 68 SEVERITY

efabox

TOLERANCE GTA 13/5 DIN 1688	TOOL LID 260X160X91	DRAWN BY J. Janser	DATE 03.05.2017
		CHECKED BY W. Jagdmann	DATE 03.05.2017
SCALE 1:1	ROUGHNESS	DRG.NO. 26016091	
	MATERIAL ALUMINIUM	SH.NO. 01	NO.OF SHEETS 01